# REM Oracle Island Unit 05195 (E4-2021)

Made in Britain

REM (UK) Limited, Glenfield Mill, Glenfield Road, Nelson, Lancashire BB9 8AW T: +44 (0)1282 619 977 F: +44 (0)1282 619 617 E: sales@rem.co.uk W: www.rem.co.uk

remuksalons
remuklimited
remukllmited
remuklimited
remukllmited

**Product Codes:**
- 05111 - Oracle Styling Unit
- 05195 - Oracle Island Unit

**Standard Equipment:**
- Back panel in any colour from the REM range
- Stainless steel anti-scratch shelf with holster
- Mirror face with LED back lighting
- Central storage column

**Optional Equipment:**
- Double electric sockets
- Stability base

**Main Construction:**
- Timber construction finished in high pressure laminate from the REM laminate range
- 4mm mirror face with Stainless steel anti-scratch shelf

**Finish:**
- Any laminate from the REM swatch range

**Features:**
- Elegant Illuminated Wall Unit
- Choice of REM colours
- Generous sized mirror
- Cast shelf
- LED lighting
- Central storage column

Laminate Finish Options:

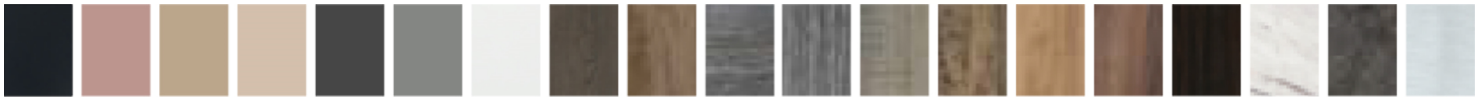

NOTE: island column will be white if styling units are Alu Brosse / Reed / Antique Rose

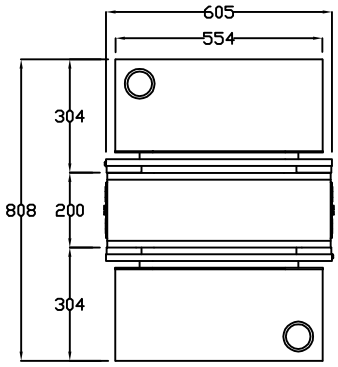


A = Laminate

Choice of REM laminates
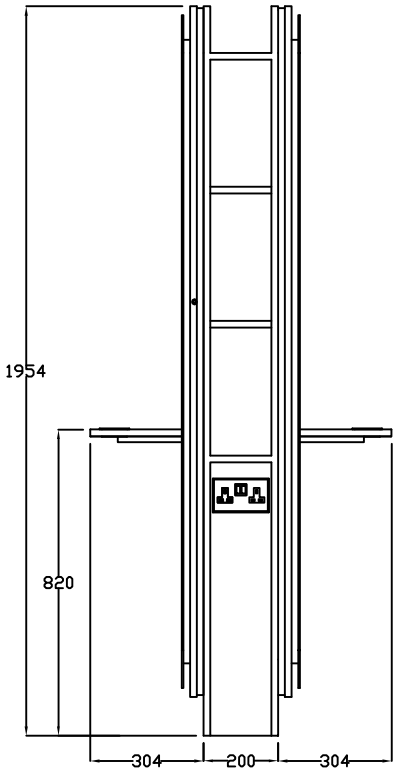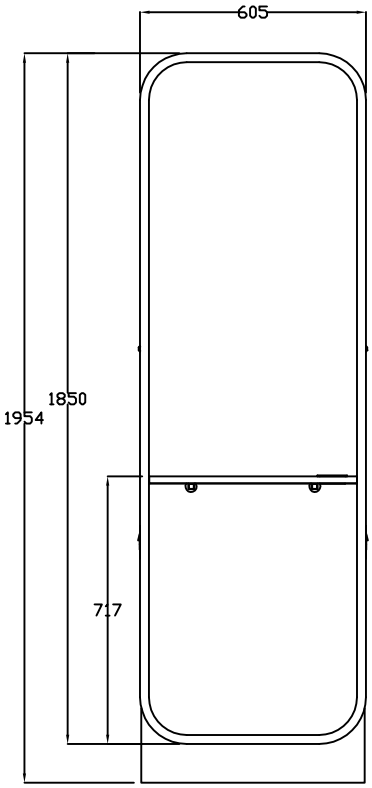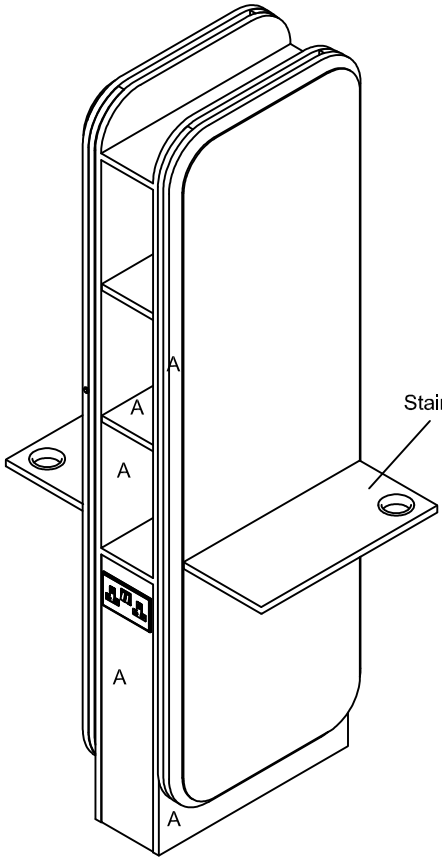
Optional extras must be clearly detailed at time of order.